Portable Power

LightSource V9 | Portable light tower

LightSource V9 | Portable light tower

Compact design
- 9 units fit on a truck or in a container
- Foldable tow bar (optional) for minimal footprint.

Accessibility
- Integral 110% bunded base with easy drain facility
- Full access to complete power train.

Mast
- 350 degrees rotation
- Hydraulic operation
- Hydraulic safety valve
- Emergency relief valve
- > 100 km/h windresistance
- In-built level gauge.

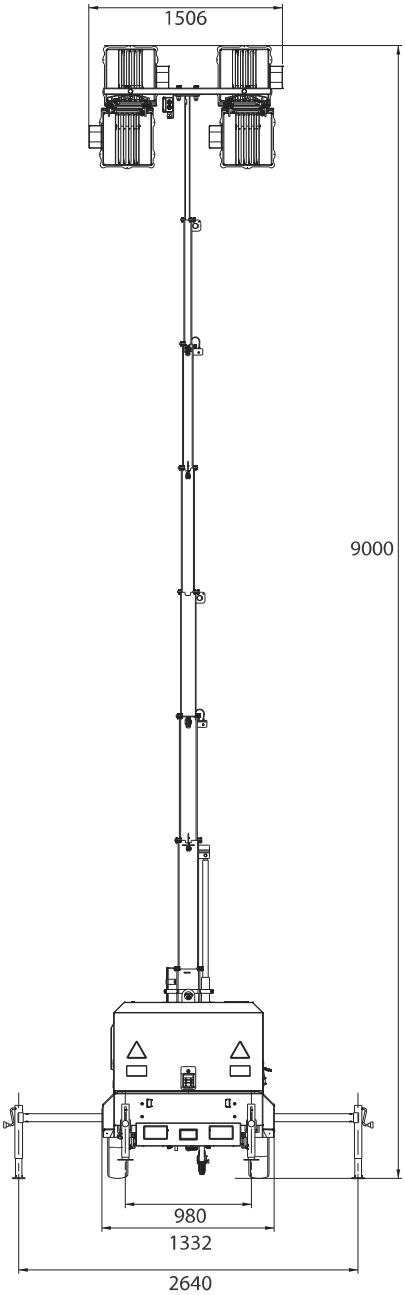

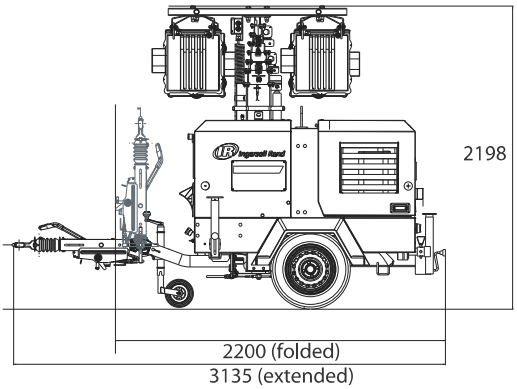

LightSource	V9
GENERAL INFORMATION	
Number of units per truck	9 units
Extended tower height	9000 mm
Shipping dimensions (L x W x H)	3135 (2200*) x 1332 x 2198 mm
Dry / Wet weight	1167 / 1263 kg
ENGINE	
Model	Kubota D1105
Power @ 1500 rpm	8.4 kW
Tank capacity	130 l
Fuel consumption	1.69 l/h
Maximum runtime	73 h
Maximum sound power level	88 LwA
ALTERNATOR	
Model	Mecc Alte LT3/130
Prime power rate	6 kVA
MAST	
Mast raise / lower time	10 sec / 25 sec
Rotation	350 degrees
Lamps	4 x 1000 W Metal Halide
Lighting power	360000 lumen
STANDARD FEATURES	
Auxiliary sockets	2 x 16 A / 230 V
High water temperature shutdown	Standard
Low oil pressure shutdown	Standard
Low fuel level shutdown	Standard
Earth rod & cable	Standard
Earth leakage protection	Standard
OPTIONS	
Auto Start with timer & photocell	
Variable height tow bar	
*Foldable tow bar	
Refinery kit	
Mains power supply connector	
Remote orientation of lamps	
Cold Start package	
Special colour	

www.doosanportablepower.com

PKSERWIS
PK-Serwis Spolka Jawna
Wroclaw, Ul. L.Petrazyckiego 47
52-434 Wroclaw
Tel.: +48 713634279 Faks: +48 713643267

DOOSAN
Portable Power

Specifications and design are subject to change without notice. Pictures of Doosan Portable Power products may show other than standard equipment.

FSC Mixed Sources

©2012 Doosan Portable Power P 4443423-EN (10-12)